COLLIN COUNTY TOLL ROAD AUTHORITY

COLLIN COUNTY OUTER LOOP

PHASE III: FUTURE EAST BOUND FRONTAGE ROAD
FM 2478 TO WEST OF US 75

ROADWAY FUNCTIONAL CLASSIFICATION:	URBAN FREEWAY
ROADWAY CONSTRUCTION TYPE:	NEW FACILITY
DESIGN SPEED (MAINLANES):	70 MPH
DESIGN SPEED (OUTER LOOP EBFR):	45 MPH
DESIGN SPEED (RAMPS):	50 MPH
DESIGN SPEED (CR 52,51,53,1117):	40 MPH
NET LENGTH OF PROJECT:	7.97 MILES
SCHEMATIC SCALE:	HORIZ: 1"=100' VERT: 1"=20'
AERIAL PHOTO DATE:	2015

COUNTY: COLLIN
DATE: JULY 2019

DESIGN SCHEMATIC
COLLIN COUNTY OUTER LOOP

ROLL 1 OF 8

LOCATION MAP

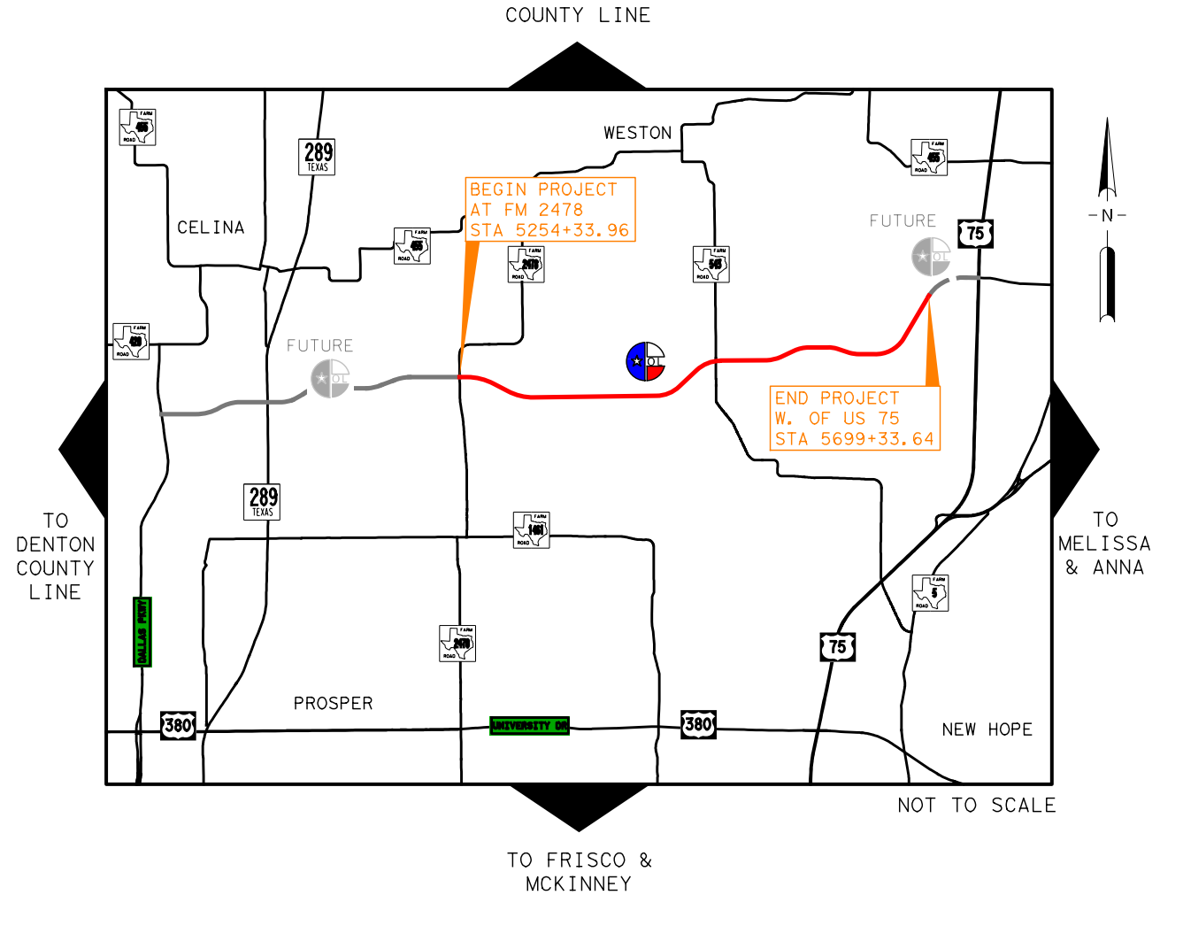
TO GRAYSON COUNTY LINE
WESTON
CELINA
289
BEGIN PROJECT AT FM 2478 STA 5254+33.96
FUTURE
75
END PROJECT W. OF US 75 STA 5699+33.64
TO DENTON COUNTY LINE
TO MELISSA & ANNA
PROSPER
380
NEW HOPE
TO FRISCO & MCKINNEY
NOT TO SCALE

LEGEND

- ▨ FUTURE MAINLANES
- 🟨 PROPOSED FRONTAGE ROAD
- ▨ FUTURE IMPROVEMENTS (BY OTHERS)
- 🟩 RAMPS
- 🟦 CURBED GORE
- 🟧 BRIDGE
- 🟦 PROPOSED CROSS STREET (BY OTHERS)
- ▨ 100-YR FEMA FLOODPLAIN
- — PARCEL BOUNDARY
- — EXISTING RIGHT-OF-WAY
- — EXISTING EASEMENT
- — PROPOSED RIGHT-OF-WAY
- — FUTURE RIGHT-OF-WAY (BY OTHERS)
- — PROPOSED DRAINAGE EASEMENT
- — PROPOSED PERMANENT SLOPE EASEMENT
- — PROPOSED TEMP CONSTRUCTION EASEMENT
- — PROPOSED CENTERLINE OUTER LOOP CORRIDOR
- — PROPOSED CENTERLINE ACCES ROAD
- — PROPOSED CENTERLINE CROSS STREET/TRANSITION
- — PROPOSED RETAINING WALL
- — EXISTING CONTOUR (1FOOT)

NOTES:

1. EXISTING FEATURES WERE NOT FIELD SURVEYED. SCHEMATIC LAYOUTS ARE BASED ON AERIAL SURVEY AND RECORD PLANS ONLY.
2. EXISTING DRIVEWAYS WILL REMAIN UNLESS IT IS DETERMINED DURING DETAILED DESIGN AND COORDINATION WITH THE CITIES OR COUNTY THAT DRIVEWAY WILL BE A SAFETY ISSUE AND/OR VIOLATES ACCESS MANAGEMENT REQUIREMENTS.
3. FINAL DETERMINATION OF CONTROL OF ACCESS WILL BE DETERMINED BY THE COUNTIES OR MUNICIPALITIES AT A FUTURE DATE.
4. ADJACENT DEVELOPMENTS ARE PRELIMINARY, DESIGNED BY OTHERS AND SUBJECT TO CHANGE.
5. SPECIFICATIONS ADOPTED BY THE TEXAS DEPARTMENT OF TRANSPORTATION NOVEMBER 1, 2014 SHALL GOVERN ON THIS PROJECT.
6. BASIS OF BEARINGS: TEXAS STATE PLANE COORDINATE SYSTEM, NAD 83 (1993), NORTH CENTRAL ZONE (4202), ALL DISTANCES AND COORDINATES SHOWN HEREON ARE SCALED FROM 0,0 USING A TXDOT SURFACE ADJUSTMENT FACTOR OF 1.00015271. COORDINATE VALUES DERIVED USING THE WESTERN DATA SYSTEM VRS NETWORK.
7. FOR RETAINING WALL BEGIN/END STATION & OFFSET, REFER TO RETAINING WALL CHART.

EXISTING UTILITY LEGEND

- — ELECTRIC LINE - OVERHEAD
- — ELECTRIC WIRE - UNDERGROUND
- — WATER LINE
- — CABLE LINE
- — FIBER OPTIC LINE
- — SANITARY LINE
- — GAS LINE
- — STORM DRAIN LINE

SCHEMATIC PREPARED BY:
BGE, INC.
REGISTRATION NUMBER F-1046
FOR INTERIM REVIEW ONLY, NOT FOR PERMITTING, BIDDING OR CONSTRUCTION.
Prepared by or under the Direct Supervision of:

NAME	P.E. NUMBER
MICHAEL H. GARRISON	79285
STONEY D. SKIDMORE	106316

3/30/2021
DATE

HORIZONTAL SCALE: 0 50 100 200 300
VERTICAL SCALE: 0 10 20 40 60

BGE, Inc.
2595 Dallas Parkway, Suite 101, Frisco, TX 75034
Tel: 972-464-4800 • www.bgeinc.com
TBPE Registration No. F-1046

Copyright 2019

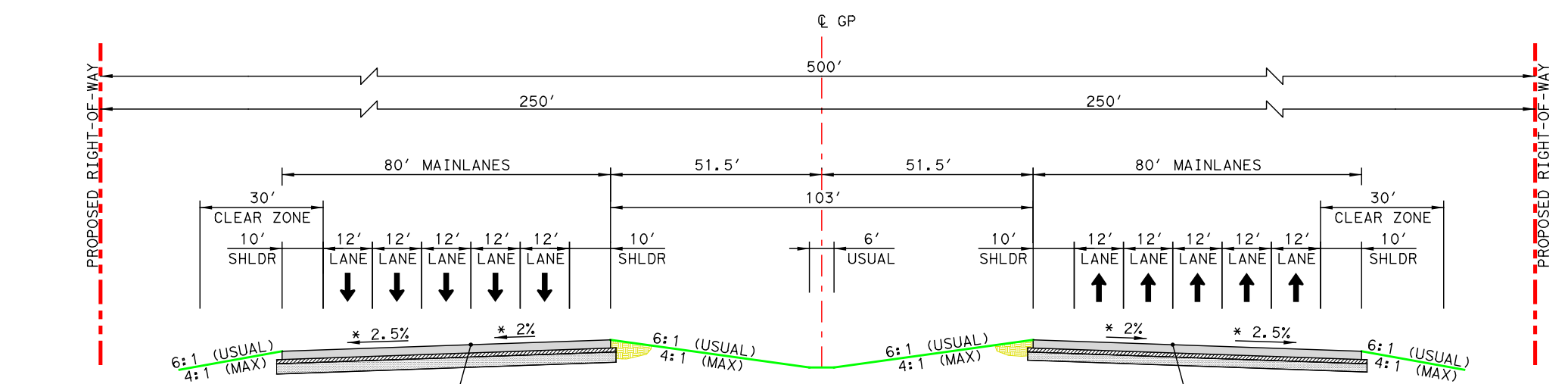
℄ GP
500'
250'
250'
80' MAINLANES
51.5'
51.5'
80' MAINLANES
30' CLEAR ZONE
103'
10' SHLDR
12' LANE
6' USUAL
± 2.5%
± 2%
6:1 (USUAL) 4:1 (MAX)
PGL
PROPOSED RIGHT-OF-WAY
* SEE SUPERELEVATION TABLE FOR CURVE TRANSITIONS

PROPOSED TYPICAL SECTION WESTBOUND MAINLANES

STA 5269+89 TO STA 5288+50 STA 5452+44 TO STA 5472+29
STA 5323+50 TO STA 5329+00 STA 5480+80 TO STA 5550+60
STA 5350+00 TO STA 5355+50 STA 5564+80 TO STA 5594+54
STA 5368+60 TO STA 5388+40 STA 5608+58 TO STA 5615+92
STA 5396+64 TO STA 5405+40 STA 5622+00 TO STA 5640+12
STA 5419+72 TO STA 5430+54 STA 5678+16 TO END

PROPOSED TYPICAL SECTION EASTBOUND MAINLANES

STA 5267+75 TO STA 5288+50 STA 5414+11 TO STA 5430+54
STA 5291+50 TO STA 5295+37 STA 5451+00 TO STA 5471+33
STA 5322+69 TO STA 5356+00 STA 5481+60 TO STA 5550+79
STA 5372+00 TO STA 5378+80 STA 5564+00 TO STA 5593+80
STA 5391+80 TO STA 5394+52 STA 5609+83 TO STA 5612+19
STA 5395+77 TO STA 5406+46 STA 5623+93 TO STA 5640+12
STA 5678+16 TO END

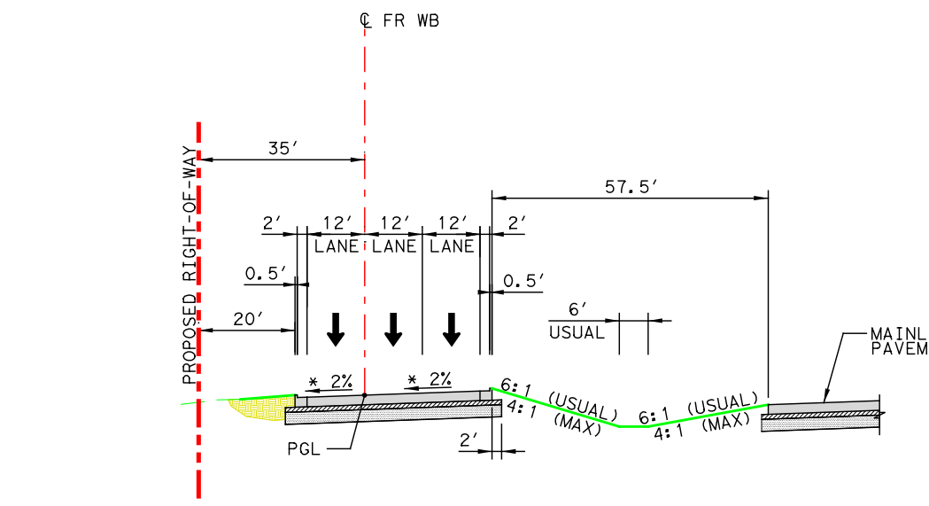
℄ FR WB
35'
57.5'
2' 12' LANE 12' LANE 12' LANE 2'
0.5'
20'
6' USUAL
± 2%
PGL
MAINLANE PAVEMENT
PROPOSED RIGHT-OF-WAY

PROPOSED TYPICAL SECTION WESTBOUND FRONTAGE ROAD

BEGIN TO STA 4289+50
STA 4291+50 TO STA 4319+57
STA 4323+00 TO STA 4341+50
STA 4349+18 TO STA 4367+00
STA 4371+00 TO STA 4390+38
STA 4476+45 TO STA 4502+33
STA 4503+33 TO STA 4601+00

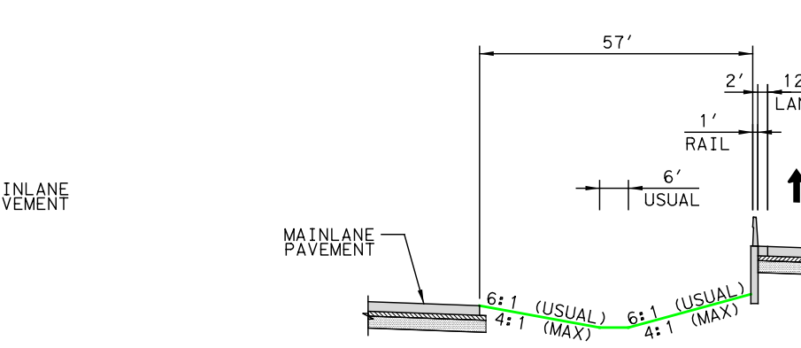
℄ FR EB
57'
34'
2' 12' LANE 12' LANE 12' LANE 2'
1' RAIL
0.5'
20'
6' USUAL
± 2%
PGL
MAINLANE PAVEMENT
PROPOSED RIGHT-OF-WAY

PROPOSED TYPICAL SECTION EASTBOUND FRONTAGE ROAD

BEGIN TO STA 1264+29
STA 1291+50 TO STA 1334+30
STA 1372+98 TO STA 1374+48

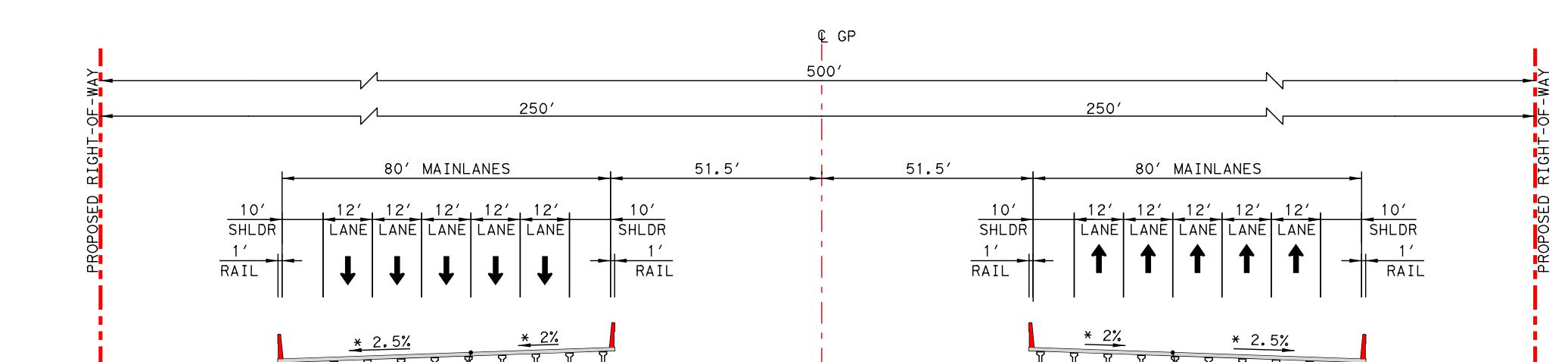
℄ GP
500'
250'
250'
80' MAINLANES
51.5'
51.5'
10' SHLDR
1' RAIL
12' LANE
± 2.5%
± 2%
GRADE BREAK
PROPOSED RIGHT-OF-WAY
* SEE SUPERELEVATION TABLE FOR CURVE TRANSITIONS

PROPOSED TYPICAL SECTION WESTBOUND MAINLANES

STA 5288+50 TO STA 5291+50 STA 5476+53 TO STA 5479+57
STA 5307+67 TO STA 5310+72 STA 5554+98 TO STA 5557+85
STA 5361+36 TO STA 5364+36 STA 5600+40 TO STA 5602+34
STA 5408+50 TO STA 5411+50 STA 5640+12 TO STA 5678+16
STA 5430+54 TO STA 5452+44

PROPOSED TYPICAL SECTION EASTBOUND MAINLANES

STA 5288+50 TO STA 5291+50 STA 5476+53 TO STA 5479+57
STA 5308+12 TO STA 5311+07 STA 5554+75 TO STA 5557+85
STA 5361+32 TO STA 5364+32 STA 5600+40 TO STA 5602+34
STA 5408+50 TO STA 5411+50 STA 5640+12 TO STA 5678+16
STA 5430+54 TO STA 5451+00

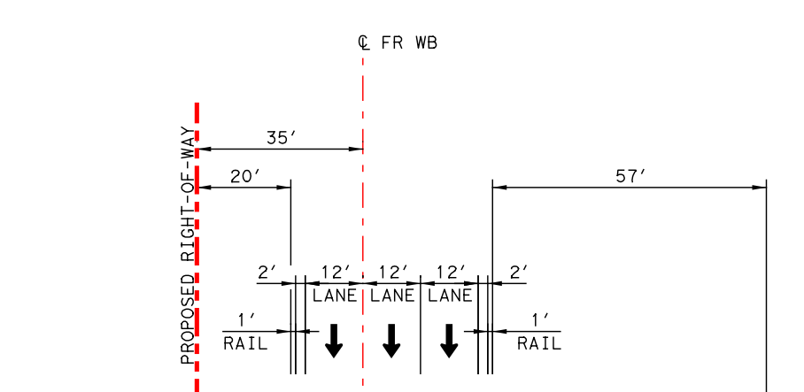
℄ FR WB
35'
20'
57'
2' 12' LANE 12' LANE 12' LANE 2'
1' RAIL
± 2%
MAINLANE PAVEMENT
PROPOSED RIGHT-OF-WAY

PROPOSED TYPICAL SECTION WESTBOUND FRONTAGE ROAD

STA 4289+50 TO STA 4291+50

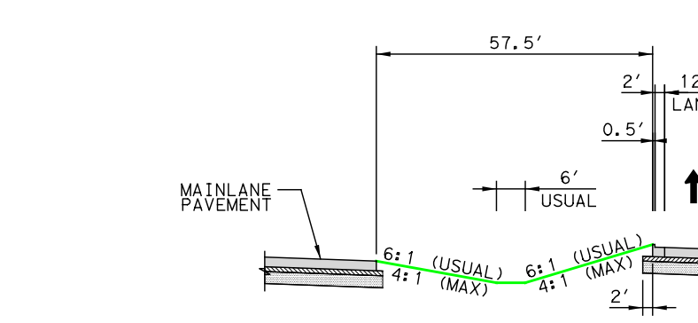
℄ FR EB
57.5'
34'
2' 12' LANE 12' LANE 12' LANE 2'
1' RAIL
19'
0.5'
6' USUAL
± 2%
PGL
MAINLANE PAVEMENT
PROPOSED RIGHT-OF-WAY

PROPOSED TYPICAL SECTION EASTBOUND FRONTAGE ROAD

STA 1342+98 TO STA 1350+18
STA 1364+38 TO STA 1369+78
STA 1385+38 TO STA 1386+58
STA 1497+82 TO STA 1500+00

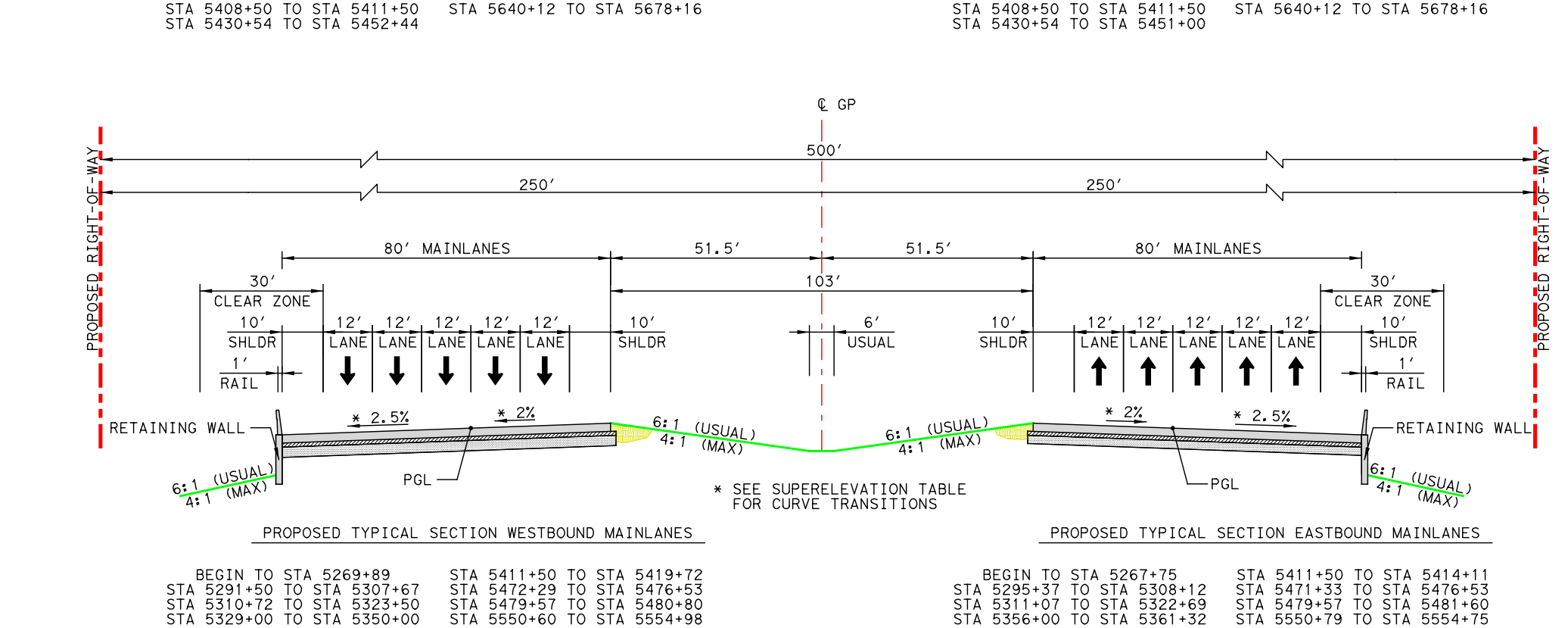
℄ GP
500'
250'
250'
80' MAINLANES
51.5'
51.5'
80' MAINLANES
30' CLEAR ZONE
103'
10' SHLDR
1' RAIL
12' LANE
6' USUAL
RETAINING WALL
± 2.5%
± 2%
6:1 (USUAL) 4:1 (MAX)
PGL
PROPOSED RIGHT-OF-WAY
* SEE SUPERELEVATION TABLE FOR CURVE TRANSITIONS

PROPOSED TYPICAL SECTION WESTBOUND MAINLANES

BEGIN TO STA 5269+89 STA 5411+50 TO STA 5419+72
STA 5291+50 TO STA 5307+67 STA 5472+29 TO STA 5476+53
STA 5310+72 TO STA 5323+50 STA 5479+57 TO STA 5480+80
STA 5329+00 TO STA 5350+00 STA 5550+60 TO STA 5554+98
STA 5355+50 TO STA 5361+36 STA 5557+85 TO STA 5564+80
STA 5364+36 TO STA 5368+60 STA 5594+54 TO STA 5600+40
STA 5388+40 TO STA 5396+64 STA 5602+34 TO STA 5608+58
STA 5405+40 TO STA 5408+50 STA 5615+92 TO STA 5622+00

PROPOSED TYPICAL SECTION EASTBOUND MAINLANES

BEGIN TO STA 5267+75 STA 5411+50 TO STA 5414+11
STA 5295+37 TO STA 5308+12 STA 5471+33 TO STA 5476+53
STA 5311+07 TO STA 5322+69 STA 5479+57 TO STA 5481+60
STA 5356+00 TO STA 5361+32 STA 5550+79 TO STA 5554+75
STA 5364+32 TO STA 5372+00 STA 5557+85 TO STA 5564+00
STA 5378+80 TO STA 5391+80 STA 5593+80 TO STA 5600+40
STA 5394+52 TO STA 5395+77 STA 5602+34 TO STA 5609+83
STA 5406+46 TO STA 5408+50 STA 5612+19 TO STA 5623+93

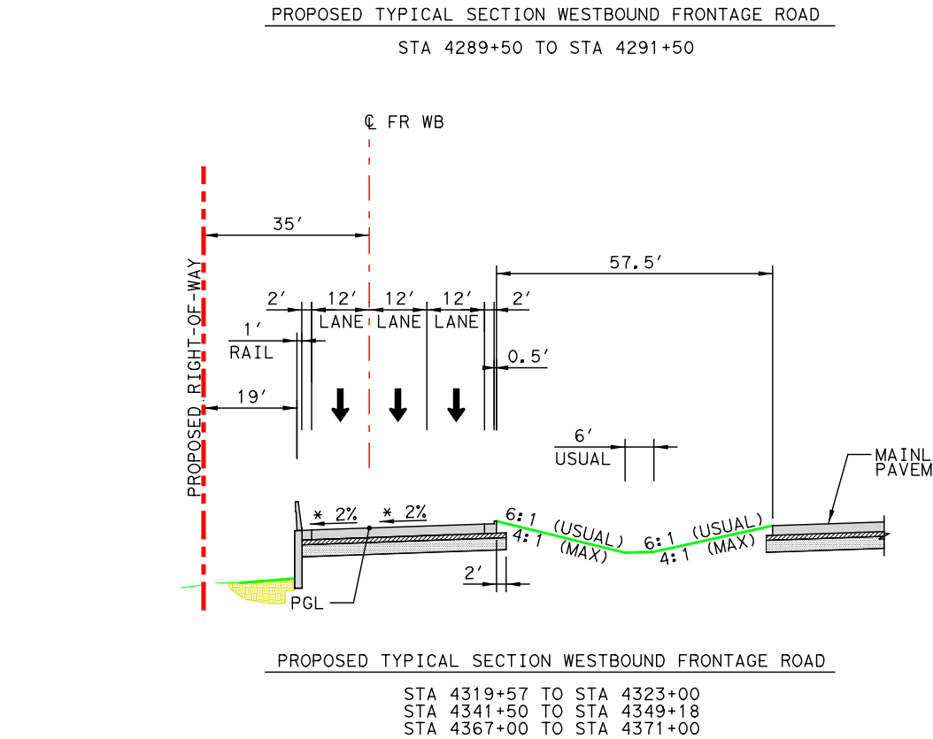
℄ FR WB
35'
57.5'
2' 12' LANE 12' LANE 12' LANE 2'
1' RAIL
19'
0.5'
6' USUAL
± 2%
PGL
MAINLANE PAVEMENT
PROPOSED RIGHT-OF-WAY

PROPOSED TYPICAL SECTION WESTBOUND FRONTAGE ROAD

STA 4319+57 TO STA 4323+00
STA 4341+50 TO STA 4349+18
STA 4367+00 TO STA 4371+00
STA 4390+38 TO STA 4391+95
STA 4502+33 TO STA 4503+33

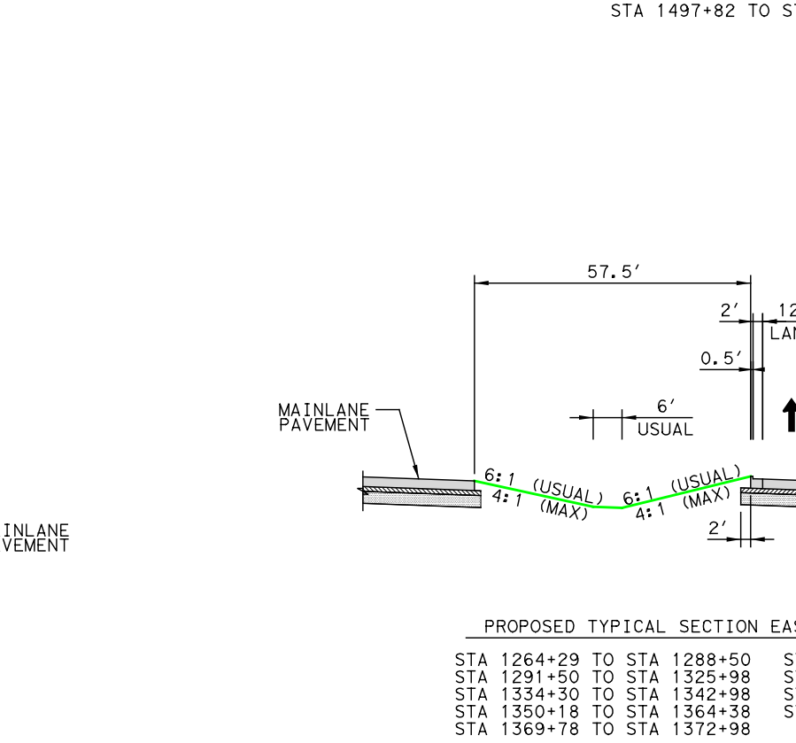
℄ FR EB
57.5'
34'
2' 12' LANE 12' LANE 12' LANE 2'
0.5'
20'
6' USUAL
± 2%
PGL
MAINLANE PAVEMENT
PROPOSED RIGHT-OF-WAY

PROPOSED TYPICAL SECTION EASTBOUND FRONTAGE ROAD

STA 1264+29 TO STA 1288+50 STA 1374+48 TO STA 1385+38
STA 1291+50 TO STA 1325+98 STA 1386+58 TO STA 1391+89
STA 1334+30 TO STA 1342+98 STA 1476+45 TO STA 1497+82
STA 1350+18 TO STA 1364+38 STA 1500+00 TO STA 1601+00
STA 1369+78 TO STA 1372+98

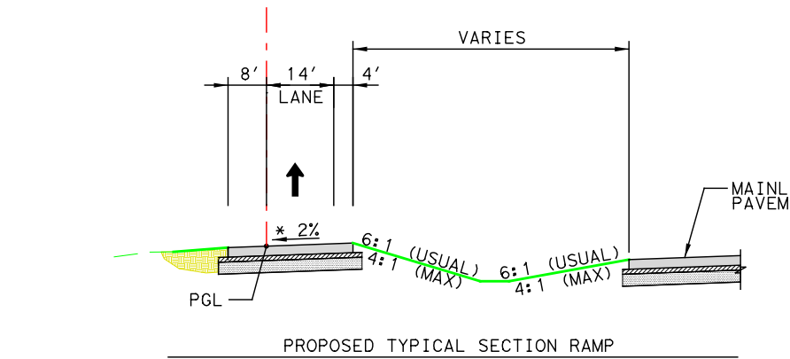
℄ RAMP
8'
14' LANE
4'
VARIES
± 2%
PGL
MAINLANE PAVEMENT

PROPOSED TYPICAL SECTION RAMP

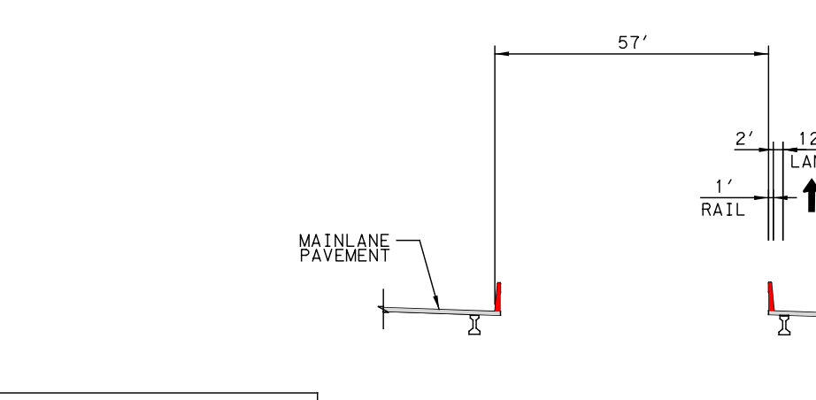
℄ FR EB
57'
34'
19'
2' 12' LANE 12' LANE 12' LANE 2'
1' RAIL
± 2%
MAINLANE PAVEMENT
PROPOSED RIGHT-OF-WAY

PROPOSED TYPICAL SECTION EASTBOUND FRONTAGE ROAD

STA 1288+50 TO STA 1291+50

RETAINING WALL CHART

RETAINING WALL	CHAIN	BEGIN STA	BEGIN OFFSET	END STA	END OFFSET
EB-1	CL_GP	5254+33	138' RT	5264+57	182' RT
EB-2	CL_GP	5260+49	144' RT	5267+75	144' RT
EB-3	CL_GP	5284+39	183' RT	5289+23	144' RT
EB-4	CL_GP	5291+08	240' RT	5292+81	240' RT
EB-5	CL_GP	5292+37	181' RT	5308+06	150' RT
EB-6	CL_GP	5311+07	150' RT	5324+06	181' RT
EB-7	CL_GP	5324+06	138' RT	5332+17	138' RT
EB-8	CL_GP	5335+72	138' RT	5344+09	138' RT
EB-9	CL_GP	5343+54	240' RT	5346+40	240' RT
WB-1	CL_GP	5254+34	150' LT	5273+05	181' LT
WB-2	CL_GP	5270+70	138' LT	5275+41	138' LT
WB-3	CL_GP	5282+98	138' LT	5287+84	138' LT
WB-5	CL_GP	5290+64	181' LT	5307+58	150' LT
WB-6	CL_GP	5310+95	150' LT	5325+92	181' LT
WB-7	CL_GP	5320+84	240' LT	5321+77	24' LT
WB-8	CL_GP	5325+92	138' LT	5332+94	138' LT
WB-9	CL_GP	5338+05	138' LT	5347+77	138' LT

CUSTER RANCH, L.P.
FM 2478
EXIST ROW
TOM ALLEN III AND WIFE,
RONALD W. LEEPER AND DIANE I LEEPER
EDWARD C. HULL
CLARK FAMILY LIVING TRUST
END CH2M, INC PROJECT
℄ GP STA 5254+50.00
BEGIN BGE, INC PROJECT LIMITS
PROP ROW
VSS LIMITED PARTNERSHIP TRACT 1
VSS LIMITED PARTNERSHIP TRACT 3
VSS LIMITED PARTNERSHIP TRACT 4
CHRISWIN INVESTMENT PROPERTIES, LTD.
RETAINING WALL WB-1
RETAINING WALL WB-2
RETAINING WALL EB-1
RETAINING WALL EB-2
OH-ELEC
N 89° 14' 49.95" E
MATCHLINE CL GP STA 5280+00
KELLY D. JUERGENS
PAUL RAY MCKINZIE & SHARON COOPER MCKINZIE
PROPOSED CULVERT - N1
6 - 10'x5' MBC
℄ GP STA 5290+46
RENE BATES
BETTY ERWIN TRUST NO. III
CCR EQUITY HOLDINGS THREE LLC
RETAINING WALL WB-3
RETAINING WALL WB-5
RETAINING WALL EB-3
RETAINING WALL EB-4
RETAINING WALL EB-5
STONEBRIDGE DR
CR 126
DONALD D'AMICO & WIFE SUZANNE D'AMICO
CRAIG STEVEN COOPER & SARITA KIDD COOPER
ADRIA R. SMITH
BEGIN BRIDGE ℄ GP WB STA 3308+01.00
END BRIDGE ℄ GP WB STA 3311+07.00
BEGIN BRIDGE ℄ GP EB STA 2307+64.00
END BRIDGE ℄ GP EB STA 2310+75.00
TEMP CONST EASEMENT
PROPOSED CULVERT - S3
4 - 3'x3' MBC
℄ GP STA 5320+83
RETAINING WALL WB-6
RETAINING WALL WB-7
RETAINING WALL EB-6
RETAINING WALL EB-7
PART OF VIRGIL DEAN & PATSY MARIE LASSITER
PRESLEY REVOCABLE TRUST
MATCHLINE CL GP STA 5325+00
BFJ LAND, LLC TRACT 1
RETAINING WALL WB-8
RETAINING WALL WB-9
RETAINING WALL EB-8
RETAINING WALL EB-9
GRAYSON-COLLIN ELECTRIC COOPERATIVE INC.
MATCHLINE CL GP STA 5344+00
N

	CURVE NO.	DELTA	DEGREE	TANGENT	LENGTH	RADIUS	BACK BEARING	AHEAD BEARING	PI STATION	PC STATION	PT STATION	PI NORTHING	PI EASTING
RAMPS													
1EBENT	1EBENT 1	6°37'10.66" (LT)	3°10'59.16"	104.10'	207.96'	1800.00'	S 62°14'11.42" E	S 68°51'22.08" E	1+04.10 R1	0+00.00 R1	2+07.96 R1	7160101.03	2512156.60
	1EBENT 2	1°36'07.34" (LT)	3°10'59.16"	25.17'	50.33'	1800.00'	S 68°51'22.08" E	S 70°27'29.42" E	2+33.13 R1	2+07.96 R1	2+58.29 R1	7160054.41	2512277.16
	1EBENT 3	8°13'18.00" (RT)	3°10'59.16"	129.37'	258.29'	1800.00'	S 70°27'29.42" E	S 62°14'11.42" E	3+87.66 R1	2+58.29 R1	5+16.58 R1	7160002.72	2512422.79
	1EBENT 4	6°56'12.08" (LT)	1°30'28.02"	230.31'	460.06'	3800.00'	S 62°14'11.42" E	S 69°10'23.50" E	12+46.89 R1	10+16.58 R1	14+76.64 R1	7159602.26	2513183.50
	1EBENT 5	2°51'27.31" (RT)	1°30'28.02"	94.78'	189.52'	3800.00'	S 69°10'23.50" E	S 66°18'56.20" E	15+71.42 R1	14+76.64 R1	16+66.16 R1	7159486.67	2513487.35
1EBEXT	1EBEXT 1	5°35'29.53" (RT)	1°00'06.03"	279.33'	558.22'	5720.00'	N 89°14'49.95" E	S 85°09'40.52" E	2+79.33 R1	0+00.00 R1	5+58.22 R1	7160801.60	2509477.22
	1EBEXT 2	1°12'48.60" (LT)	1°00'06.03"	60.58'	121.15'	5720.00'	S 85°09'40.52" E	S 86°22'29.12" E	8+38.02 R1	7+77.44 R1	8+98.59 R1	7160754.43	2510034.36
	1EBEXT 3	3°43'12.52" (RT)	1°11'07.40"	156.97'	313.83'	4833.50'	S 86°22'29.12" E	S 82°39'16.61" E	10+55.56 R1	8+98.59 R1	12+12.42 R1	7160740.68	2510251.48
	1EBEXT 4	13°46'07.70" (RT)	1°46'25.91"	389.98'	776.20'	3230.00'	S 82°39'16.61" E	S 68°53'08.91" E	16+02.41 R1	12+12.42 R1	19+88.63 R1	7160670.75	2510793.94
	1EBEXT 5	2°43'31.09" (LT)	1°46'25.91"	76.83'	153.64'	3230.00'	S 68°53'08.91" E	S 71°36'39.99" E	20+65.46 R1	19+88.63 R1	21+42.27 R1	7160502.59	2511229.41
1WBENT	1WBENT 1	2°05'37.49" (LT)	1°30'28.02"	69.44'	138.86'	3800.00'	N 89°14'49.95" E	N 87°09'12.46" E	0+69.44 R1	0+00.00 R1	1+38.86 R1	7161060.71	2509788.37
	1WBENT 2	13°41'49.29" (RT)	1°30'28.02"	456.39'	908.42'	3800.00'	N 87°09'12.46" E	S 79°08'58.26" E	5+95.25 R1	1+38.86 R1	10+47.28 R1	7161086.82	2510313.55
	1WBENT 3	5°32'41.75" (RT)	1°06'32.35"	250.20'	500.00'	5166.50'	S 79°08'58.26" E	S 73°36'16.50" E	12+97.48 R1	10+47.28 R1	15+47.28 R1	7160953.81	2511007.49
	1WBENT 4	5°43'42.56" (LT)	3°10'59.16"	90.06'	179.97'	1800.00'	S 73°36'16.50" E	S 79°19'59.07" E	16+37.34 R1	15+47.28 R1	17+27.25 R1	7160857.77	2511333.91
	1WBENT 5	11°47'20.10" (RT)	3°10'59.16"	185.84'	370.36'	1800.00'	S 79°19'59.07" E	S 67°32'38.96" E	19+13.09 R1	17+27.25 R1	20+97.61 R1	7160806.70	2511605.04
1WBEXT	1WBEXT 1	10°26'53.93" (RT)	3°10'59.16"	164.58'	328.24'	1800.00'	S 64°52'29.82" E	S 54°25'35.90" E	1+64.58 R1	0+00.00 R1	3+28.24 R1	7160568.06	2512147.58
	1WBEXT 2	7°48'35.52" (LT)	3°10'59.16"	122.87'	245.35'	1800.00'	S 54°25'35.90" E	S 62°14'11.42" E	4+51.11 R1	3+28.24 R1	5+73.60 R1	7160400.84	2512381.38
	1WBEXT 3	5°08'49.51" (RT)	1°30'28.02"	170.80'	341.37'	3800.00'	S 62°14'11.42" E	S 57°05'21.91" E	11+44.40 R1	9+73.60 R1	13+14.97 R1	7160077.71	2512995.19
	1WBEXT 4	8°57'17.48" (LT)	1°30'28.02"	297.56'	593.91'	3800.00'	S 57°05'21.91" E	S 66°02'39.39" E	16+12.53 R1	13+14.97 R1	19+08.87 R1	7159823.24	2513388.39

	CURVE NO.	DELTA	DEGREE	TANGENT	LENGTH	RADIUS	BACK BEARING	AHEAD BEARING	PI STATION	PC STATION	PT STATION	PI NORTHING	PI EASTING
FRONTAGE ROADS													
CL FR EB	CL FR EB 3	7°30'45.85" (RT)	3°49'10.99"	98.48'	196.68'	1500.00'	N 89°14'49.95" E	S 83°14'24.20" E	1259+06.69	1258+08.21	1260+04.89	7160725.65	2509824.63
	CL FR EB 4	3°56'03.70" (LT)	3°49'10.99"	51.52'	103.00'	1500.00'	S 83°14'24.20" E	S 87°10'27.90" E	1260+56.41	1260+04.89	1261+07.89	7160708.00	2509973.59
	CL FR EB 5	24°56'16.48" (RT)	1°11'51.10"	1057.98'	2082.45'	4784.50'	S 87°10'27.90" E	S 62°14'11.42" E	1271+65.87	1261+07.89	1281+90.34	7160653.30	2511081.74
	CL FR EB 8	5°29'03.94" (LT)	1°05'54.84"	249.81'	499.23'	5215.50'	S 62°14'11.42" E	S 67°43'15.36" E	1297+83.66	1295+33.85	1300+33.08	7159418.27	2513427.82
	CL FR EB 9	6°53'26.66" (LT)	3°49'10.99"	90.31'	180.40'	1500.00'	S 67°43'15.36" E	S 74°36'42.02" E	1301+23.39	1300+33.08	1302+13.48	7159289.33	2513742.54
	CL FR EB 10	3°48'46.42" (RT)	3°49'10.99"	49.93'	99.82'	1500.00'	S 74°36'42.02" E	S 70°47'55.61" E	1302+63.41	1302+13.48	1303+13.30	7159252.11	2513877.75
	CL FR EB 11	11°53'07.24" (LT)	1°06'03.96"	541.65'	1079.41'	5203.50'	S 70°47'55.61" E	S 82°41'02.84" E	1308+54.95	1303+13.30	1313+92.71	7159057.55	2514436.42
	CL FR EB 12	3°48'46.42" (RT)	3°49'10.99"	49.93'	99.82'	1500.00'	S 82°41'02.84" E	S 78°52'16.43" E	1314+42.64	1313+92.71	1314+92.53	7158982.22	2515023.18
	CL FR EB 13	6°53'26.66" (LT)	3°49'10.99"	90.31'	180.40'	1500.00'	S 78°52'16.43" E	S 85°45'43.09" E	1315+82.84	1314+92.53	1316+72.93	7158955.15	2515160.78
	CL FR EB 14	5°01'04.06" (LT)	1°05'54.84"	228.53'	456.76'	5215.50'	S 85°45'43.09" E	N 89°13'12.85" E	1319+01.45	1316+72.93	1321+29.69	7158931.59	2515478.74
CL FR WB	CL FR WB 3	3°12'54.26" (LT)	3°49'10.99"	42.10'	84.17'	1500.00'	N 89°14'49.95" E	N 86°01'55.69" E	4259+38.27	4258+96.18	4259+80.35	7161130.02	2509849.92
	CL FR WB 4	7°09'14.75" (RT)	3°49'10.99"	93.77'	187.29'	1500.00'	N 86°01'55.69" E	S 86°48'49.56" E	4260+74.11	4259+80.35	4261+67.64	7161139.42	2509985.46
	CL FR WB 5	24°34'38.14" (RT)	1°05'54.84"	1136.08'	2237.21'	5215.50'	S 86°48'49.56" E	S 62°14'11.42" E	4273+03.72	4261+67.64	4284+04.85	7161071.07	2511213.40
	CL FR WB 8	5°08'15.61" (LT)	1°11'51.10"	214.66'	429.02'	4784.50'	S 62°14'11.42" E	S 67°22'27.03" E	4299+63.01	4297+48.36	4301+77.38	7159816.03	2513597.48
	CL FR WB 9	3°42'31.85" (RT)	3°49'10.99"	48.57'	97.10'	1500.00'	S 67°22'27.03" E	S 63°39'55.18" E	4302+25.95	4301+77.38	4302+74.48	7159714.76	2513840.44
	CL FR WB 10	7°05'01.33" (LT)	3°49'10.99"	92.84'	185.45'	1500.00'	S 63°39'55.18" E	S 70°44'56.51" E	4303+67.32	4302+74.48	4304+59.93	7159652.03	2513967.18
	CL FR WB 11	13°04'34.06" (LT)	1°11'40.32"	549.72'	1094.66'	4796.50'	S 70°44'56.51" E	S 83°49'30.56" E	4310+09.65	4304+59.93	4315+54.59	7159440.17	2514573.81
	CL FR WB 12	7°05'01.33" (LT)	3°49'10.99"	92.84'	185.45'	1500.00'	S 83°49'30.56" E	N 89°05'28.11" E	4316+47.44	4315+54.59	4317+40.04	7159371.06	2515212.65
	CL FR WB 13	3°42'31.85" (RT)	3°49'10.99"	48.57'	97.10'	1500.00'	N 89°05'28.11" E	S 87°12'00.04" E	4317+88.61	4317+40.04	4318+37.14	7159373.30	2515354.04
	CL FR WB 14	3°34'47.11" (LT)	1°11'51.10"	149.51'	298.93'	4784.50'	S 87°12'00.04" E	N 89°13'12.85" E	4319+86.65	4318+37.14	4321+36.07	7159363.63	2515551.88

	CURVE NO.	DELTA	DEGREE	TANGENT	LENGTH	RADIUS	BACK BEARING	AHEAD BEARING	PI STATION	PC STATION	PT STATION	PI NORTHING	PI EASTING
CENTERLINE													
CL GP	CL GP 3	28° 30' 58.63" (RT)	1° 08' 45.30"	1270.59'	2488.52'	5000.00'	N 89° 14' 49.95" E	S 62° 14' 11.42" E	5270+79.67	5258+09.08	5282+97.59	7160943.04	2510993.99
	CL GP 6	28° 32' 35.73" (LT)	1° 08' 45.30"	1271.85'	2490.87'	5000.00'	S 62° 14' 11.42" E	N 89° 13' 12.85" E	5309+12.95	5296+41.10	5321+31.97	7159132.87	2514432.58
MAINLANES													
CL GP EB	CL GP EB 3	28° 30' 58.63" (RT)	1° 09' 57.07"	1248.87'	2445.96'	4914.50'	N 89° 14' 49.95" E	S 62° 14' 11.42" E	2270+57.95	2258+09.08	2282+55.04	7160857.26	2510973.39
	CL GP EB 6	28° 32' 35.73" (LT)	1° 07' 35.94"	1293.60'	2533.46'	5085.50'	S 62° 14' 11.42" E	N 89° 13' 12.85" E	2308+92.15	2295+98.55	2321+32.01	7159047.08	2514412.00
CL GP WB	CL GP WB 3	28° 30' 58.63" (RT)	1° 07' 35.94"	1292.32'	2531.07'	5085.50'	N 89° 14' 49.95" E	S 62° 14' 11.42" E	3271+01.40	3258+09.08	3283+40.15	7161028.81	2511014.59
	CL GP WB 6	28° 32' 35.73" (LT)	1° 09' 57.07"	1250.10'	2448.28'	4914.50'	S 62° 14' 11.42" E	N 89° 13' 12.85" E	3309+33.76	3296+83.66	3321+31.93	7159218.66	2514453.16

CHAIN NAME	CURVE NAME	BEGIN CROSS SLOPE	BEGIN TRANSITION	BEGIN FULL SUPER	SUPER RATE	END FULL SUPER	END TRANSITION	END CROSS SLOPE
CL GP EB	CL GP EB 3	2.00%	2256+30	2258+40	3.76%	2281+90	2284+00	2.00%
	CL GP EB 6	-2.00%	2293+05	2296+45	3.66%	2320+20	2323+60	-2.00%
CL GP WB	CL GP WB 3	-2.00%	3255+20	3258+60	3.66%	3282+30	3285+70	-2.00%
	CL GP WB 6	2.00%	3295+05	3297+15	3.76%	3320+65	3322+75	2.00%

	CURVE NO.	DELTA	DEGREE	TANGENT	LENGTH	RADIUS	BACK BEARING	AHEAD BEARING	PI STATION	PC STATION	PT STATION	PI NORTHING	PI EASTING
RAMPS													
2EBENT	2EBENT 1	8°13'18.00" (LT)	3°10'59.16"	129.37'	258.29'	1800.00'	N 89°13'12.85" E	N 80°59'54.85" E	1+29.37 R1	0+00.00 R1	2+58.29 R1	7158965.63	2517098.12
	2EBENT 2	8°13'18.00" (RT)	3°10'59.16"	129.37'	258.29'	1800.00'	N 80°59'54.85" E	N 89°13'12.85" E	3+87.66 R1	2+58.29 R1	5+16.58 R1	7159006.11	2517353.67
2EBEXT	2EBEXT 1	2°04'57.73" (RT)	1°30'28.02"	69.07'	138.13'	3800.00'	S 80°08'54.03" E	S 78°03'56.30" E	0+69.07 R1	0+00.00 R1	1+38.13 R1	7159080.10	2514825.99
	2EBEXT 2	12°42'50.85" (LT)	1°30'28.02"	423.36'	843.23'	3800.00'	S 78°03'56.30" E	N 89°13'12.85" E	5+61.49 R1	1+38.13 R1	9+81.36 R1	7158978.27	2515307.77
	2EBEXT 3	8°13'18.00" (RT)	3°10'59.16"	129.37'	258.29'	1800.00'	N 89°13'12.85" E	S 82°33'29.15" E	16+10.73 R1	14+81.36 R1	17+39.65 R1	7158992.59	2516360.40
	2EBEXT 4	8°13'18.00" (LT)	3°10'59.16"	129.37'	258.29'	1800.00'	S 82°33'29.15" E	N 89°13'12.85" E	18+69.02 R1	17+39.65 R1	19+97.95 R1	7158959.08	2516616.95
2WBENT	2WBENT 1	14°35'21.81" (LT)	1°30'28.02"	486.43'	967.61'	3800.00'	S 78°53'43.46" E	N 86°30'54.73" E	4+86.43 R1	0+00.00 R1	9+67.61 R1	7159280.64	2515176.30
	2WBENT 2	2°42'18.12" (RT)	1°04'51.79"	125.13'	250.22'	5300.00'	N 86°30'54.73" E	N 89°13'12.85" E	10+92.74 R1	9+67.61 R1	12+17.83 R1	7159317.82	2515786.74
	2WBENT 3	8°13'18.00" (LT)	3°10'59.16"	129.37'	258.29'	1800.00'	N 89°13'12.85" E	N 80°59'54.85" E	18+47.20 R1	17+17.83 R1	19+76.12 R1	7159328.09	2516541.17
	2WBENT 4	8°13'18.00" (RT)	3°10'59.16"	129.37'	258.29'	1800.00'	N 80°59'54.85" E	N 89°13'12.85" E	21+05.49 R1	19+76.12 R1	22+34.41 R1	7159368.57	2516796.72
2WBEXT	2WBEXT 1	8°13'18.00" (RT)	3°10'59.16"	129.37'	258.29'	1800.00'	N 89°13'12.85" E	S 82°33'29.15" E	1+29.37 R1	0+00.00 R1	2+58.29 R1	7159378.28	2517510.50
	2WBEXT 2	8°13'18.00" (LT)	3°10'59.16"	129.37'	258.29'	1800.00'	S 82°33'29.15" E	N 89°13'12.85" E	3+87.66 R1	2+58.29 R1	5+16.58 R1	7159344.77	2517767.05

COLLIN COUNTY TOLL ROAD AUTHORITY

COLLIN COUNTY OUTER LOOP
PHASE III: FUTURE EAST BOUND FRONTAGE ROAD
FM 2478 TO WEST OF US 75

ROADWAY FUNCTIONAL CLASSIFICATION: URBAN FREEWAY
ROADWAY CONSTRUCTION TYPE: NEW FACILITY
DESIGN SPEED (MAINLANES): 70 MPH
DESIGN SPEED (OUTER LOOP EBFR): 45 MPH
DESIGN SPEED (RAMPS): 50 MPH
DESIGN SPEED (CR 52,51,53,1117): 40 MPH
NET LENGTH OF PROJECT: 7.97 MILES
SCHEMATIC SCALE: HORIZ: 1"=100' VERT: 1"=20'
AERIAL PHOTO DATE: 2015

COUNTY: COLLIN
DATE: JULY 2019
DESIGN SCHEMATIC COLLIN COUNTY OUTER LOOP
ROLL 1 OF 8

LOCATION MAP
LEGEND
NOTES
EXISTING UTILITY LEGEND
SCHEMATIC PREPARED BY: BGE, INC. REGISTRATION NUMBER F-1046
MICHAEL H. GARRISON 79285
STONEY D. SKIDMORE 106316
3/30/2021
BGE, Inc. 2595 Dallas Parkway, Suite 101, Frisco, TX 75034
Tel: 972-464-4800 • www.bgeinc.com
TBPE Registration No. F-1046
Copyright 2019