COLLIN COUNTY TOLL ROAD AUTHORITY

COLLIN COUNTY OUTER LOOP

PHASE III: FUTURE EAST BOUND FRONTAGE ROAD
FM 2478 TO WEST OF US 75

ROADWAY FUNCTIONAL CLASSIFICATION:	URBAN FREEWAY
ROADWAY CONSTRUCTION TYPE:	NEW FACILITY
DESIGN SPEED (MAINLANES):	70 MPH
DESIGN SPEED (OUTER LOOP EBFR):	45 MPH
DESIGN SPEED (RAMPS):	50 MPH
DESIGN SPEED (CR 52,51,53,1117):	40 MPH
NET LENGTH OF PROJECT:	7.97 MILES
SCHEMATIC SCALE:	HORIZ: 1"=100' VERT: 1"=20'
AERIAL PHOTO DATE:	2015

LOCATION MAP

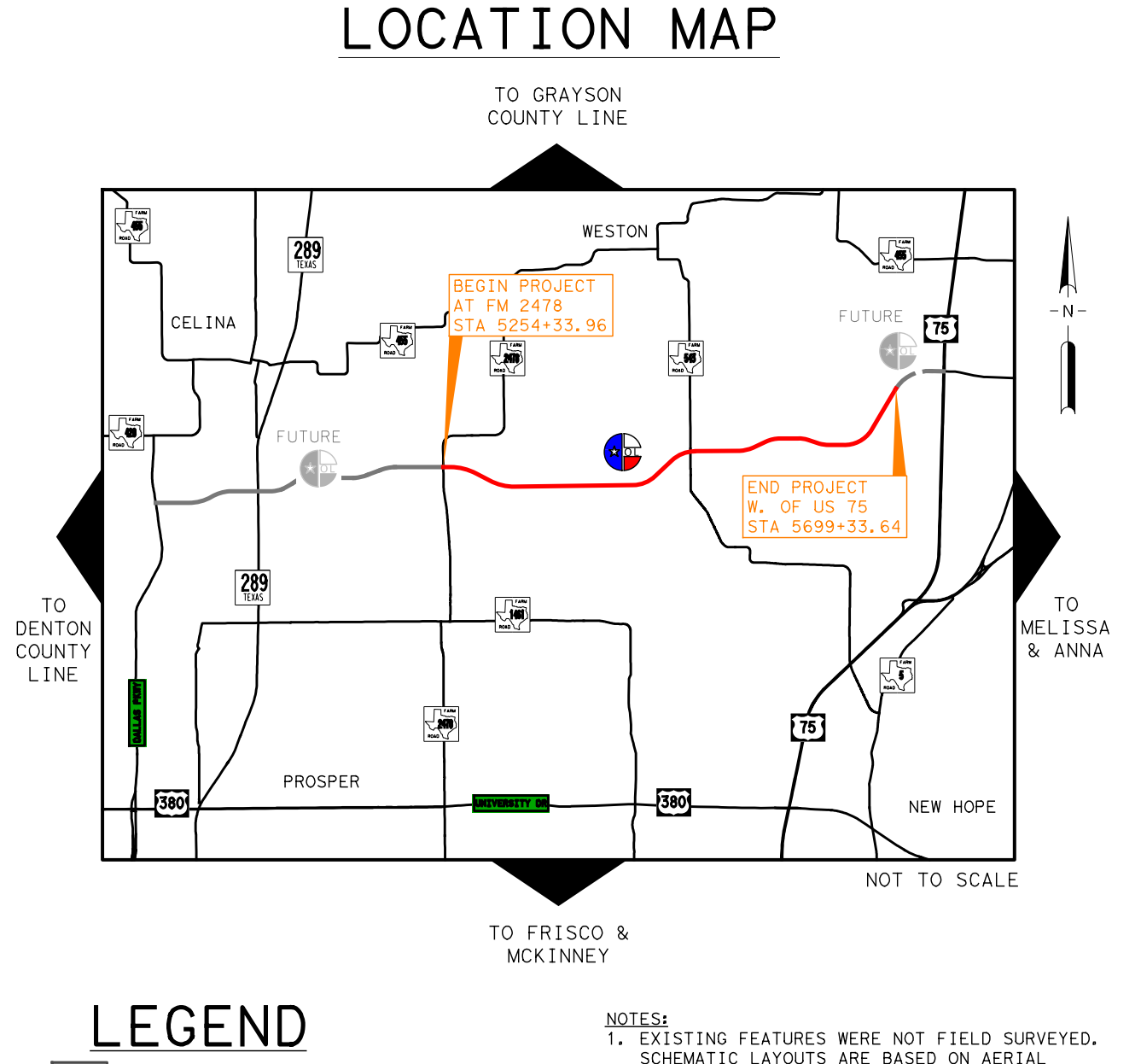
TO GRAYSON COUNTY LINE
WESTON
CELINA
BEGIN PROJECT AT FM 2478 STA 5254+33.96
FUTURE
END PROJECT W. OF US 75 STA 5699+33.64
TO DENTON COUNTY LINE
TO MELISSA & ANNA
PROSPER
NEW HOPE
289
380
75
NOT TO SCALE
TO FRISCO & MCKINNEY

DESIGN SCHEMATIC
COLLIN COUNTY OUTER LOOP

COUNTY: COLLIN
DATE: JULY 2019

ROLL 5 OF 8

LEGEND

▨	FUTURE MAINLANES
🟨	PROPOSED FRONTAGE ROAD
▨	FUTURE IMPROVEMENTS (BY OTHERS)
🟩	RAMPS
🟦	CURBED GORE
🟧	BRIDGE
🟦	PROPOSED CROSS STREET (BY OTHERS)
▨	100-YR FEMA FLOODPLAIN
—	PARCEL BOUNDARY
- -	EXISTING RIGHT-OF-WAY
- -	EXISTING EASEMENT
- -	PROPOSED RIGHT-OF-WAY
- -	FUTURE RIGHT-OF-WAY (BY OTHERS)
—	PROPOSED DRAINAGE EASEMENT
—	PROPOSED PERMANENT SLOPE EASEMENT
—	PROPOSED TEMP CONSTRUCTION EASEMENT
- -	PROPOSED CENTERLINE OUTER LOOP CORRIDOR
- -	PROPOSED CENTERLINE ACCES ROAD
—	PROPOSED CENTERLINE CROSS STREET/TRANSITION
—	PROPOSED RETAINING WALL
—	EXISTING CONTOUR (1FOOT)

NOTES:
1. EXISTING FEATURES WERE NOT FIELD SURVEYED. SCHEMATIC LAYOUTS ARE BASED ON AERIAL SURVEY AND RECORD PLANS ONLY.
2. EXISTING DRIVEWAYS WILL REMAIN UNLESS IT IS DETERMINED DURING DETAILED DESIGN AND COORDINATION WITH THE CITIES OR COUNTY THAT DRIVEWAY WILL BE A SAFETY ISSUE AND/OR VIOLATES ACCESS MANAGEMENT REQUIREMENTS.
3. FINAL DETERMINATION OF CONTROL OF ACCESS WILL BE DETERMINED BY THE COUNTIES OR MUNICIPALITIES AT A FUTURE DATE.
4. ADJACENT DEVELOPMENTS ARE PRELIMINARY, DESIGNED BY OTHERS AND SUBJECT TO CHANGE.
5. SPECIFICATIONS ADOPTED BY THE TEXAS DEPARTMENT OF TRANSPORTATION NOVEMBER 1, 2014 SHALL GOVERN ON THIS PROJECT.
6. BASIS OF BEARINGS: TEXAS STATE PLANE COORDINATE SYSTEM, NAD 83 (1993), NORTH CENTRAL ZONE (4202), ALL DISTANCES AND COORDINATES SHOWN HEREON ARE SCAILED FROM 0,0 USING A TXDOT SURFACE ADJUSTMENT FACTOR OF 1.00015271. COORDINATE VALUES DERIVED USING THE WESTERN DATA SYSTEM VRS NETWORK.
7. FOR RETAINING WALL BEGIN/END STATION & OFFSET, REFER TO RETAINING WALL CHART.

EXISTING UTILITY LEGEND

—	ELECTRIC LINE - OVERHEAD
—	ELECTRIC WIRE - UNDERGROUND
—	WATER LINE
—	CABLE LINE
—	FIBER OPTIC LINE
—	SANITARY LINE
—	GAS LINE
—	STORM DRAIN LINE

SCHEMATIC PREPARED BY:
BGE, INC.
REGISTRATION NUMBER F-1046
FOR INTERIM REVIEW ONLY, NOT FOR PERMITTING, BIDDING OR CONSTRUCTION.
Prepared by or under the Direct Supervision of:

NAME	P.E. NUMBER
MICHAEL H. GARRISON	79285
STONEY D. SKIDMORE	106316

7/10/2019
DATE

HORIZONTAL SCALE
0 50 100 200 300
VERTICAL SCALE
0 10 20 40 60

BGE, Inc.
2595 Dallas Parkway, Suite 101, Frisco, TX 75034
Tel: 972-464-4800 • www.bgeinc.com
TBPE Registration No. F-1046

Copyright 2019

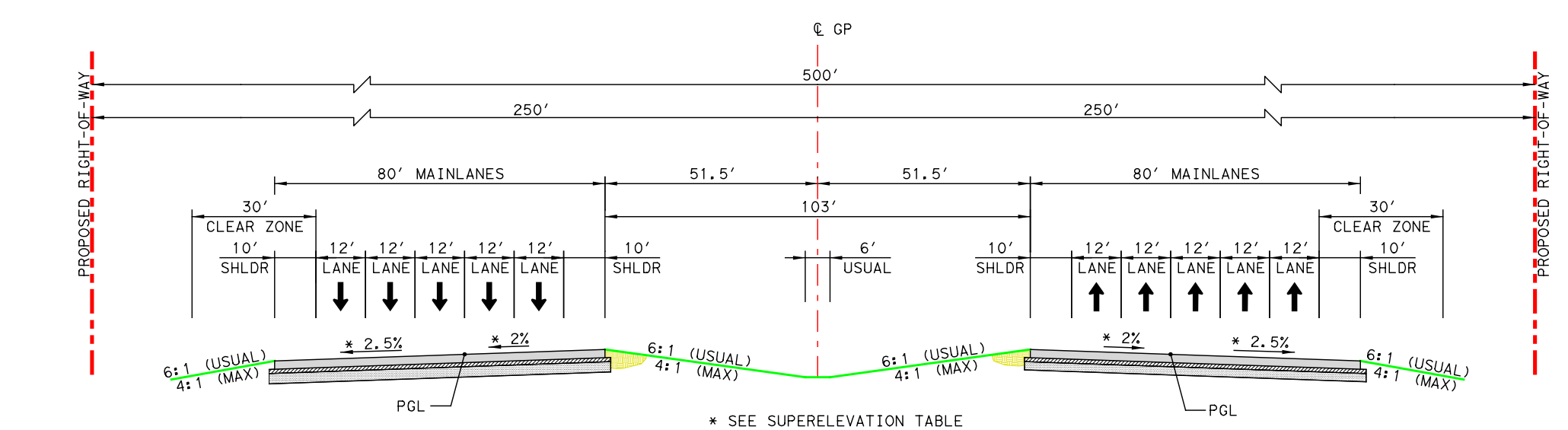
℄ GP
500'
250'
250'
80' MAINLANES
51.5'
51.5'
80' MAINLANES
103'
30' CLEAR ZONE
PROPOSED RIGHT-OF-WAY
PGL
* SEE SUPERELEVATION TABLE FOR CURVE TRANSITIONS

PROPOSED TYPICAL SECTION WESTBOUND MAINLANES

STA 5269+89 TO STA 5288+50 STA 5452+44 TO STA 5472+29
STA 5323+50 TO STA 5329+00 STA 5480+80 TO STA 5550+60
STA 5350+00 TO STA 5355+50 STA 5564+80 TO STA 5594+54
STA 5368+60 TO STA 5388+40 STA 5608+58 TO STA 5615+92
STA 5396+64 TO STA 5405+40 STA 5622+00 TO STA 5640+12
STA 5419+72 TO STA 5430+54 STA 5678+16 TO END

PROPOSED TYPICAL SECTION EASTBOUND MAINLANES

STA 5267+75 TO STA 5288+50 STA 5414+11 TO STA 5430+54
STA 5291+50 TO STA 5295+37 STA 5451+00 TO STA 5471+33
STA 5322+69 TO STA 5356+00 STA 5481+60 TO STA 5550+79
STA 5372+00 TO STA 5378+80 STA 5564+00 TO STA 5593+80
STA 5391+80 TO STA 5394+52 STA 5609+83 TO STA 5612+19
STA 5395+77 TO STA 5406+46 STA 5623+93 TO STA 5640+12
STA 5678+16 TO END

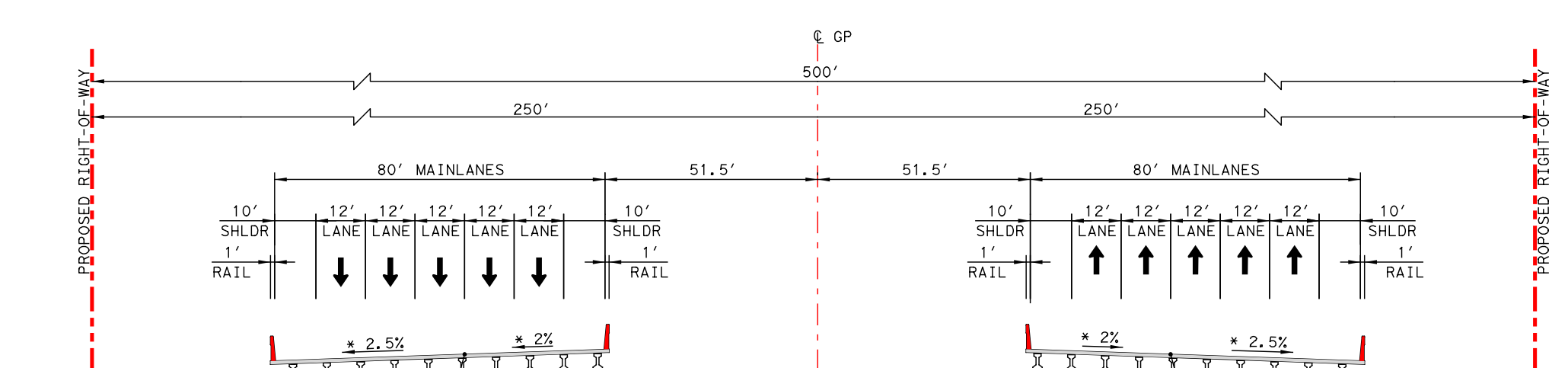
℄ GP
500'
250'
250'
80' MAINLANES
51.5'
51.5'
80' MAINLANES
GRADE BREAK
* SEE SUPERELEVATION TABLE FOR CURVE TRANSITIONS

PROPOSED TYPICAL SECTION WESTBOUND MAINLANES

STA 5288+50 TO STA 5291+50 STA 5476+53 TO STA 5479+57
STA 5307+67 TO STA 5310+72 STA 5554+98 TO STA 5557+85
STA 5360+42 TO STA 5363+42 STA 5600+40 TO STA 5602+34
STA 5408+50 TO STA 5411+50 STA 5640+12 TO STA 5678+16
STA 5430+54 TO STA 5452+44

PROPOSED TYPICAL SECTION EASTBOUND MAINLANES

STA 5288+50 TO STA 5291+50 STA 5476+53 TO STA 5479+57
STA 5308+12 TO STA 5311+07 STA 5554+75 TO STA 5557+85
STA 5360+42 TO STA 5363+42 STA 5600+40 TO STA 5602+34
STA 5408+50 TO STA 5411+50 STA 5640+12 TO STA 5678+16
STA 5430+54 TO STA 5451+00

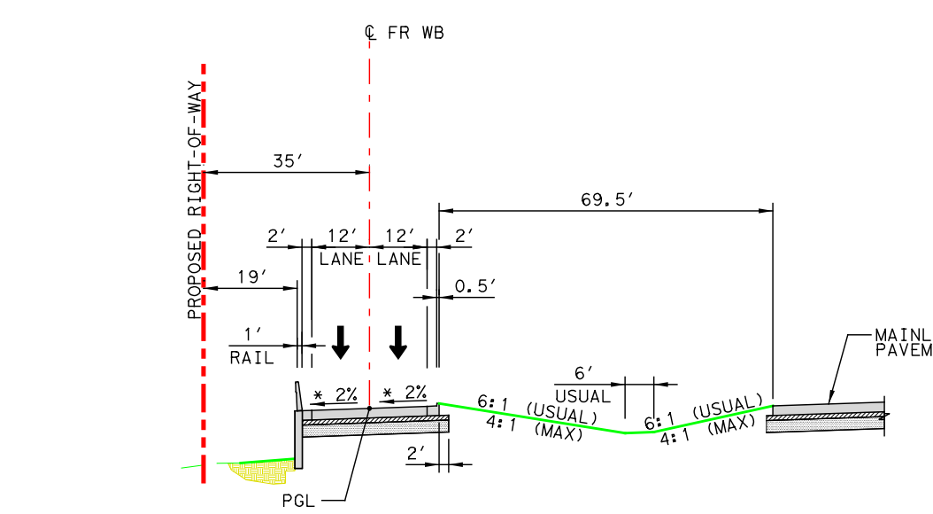

PROPOSED TYPICAL SECTION WESTBOUND FRONTAGE ROAD

STA 4391+95 TO STA 4396+65
STA 4415+62 TO STA 4429+28
STA 4452+24 TO STA 4459+00
STA 4473+07 TO STA 4476+45
STA 4619+38 TO STA 4623+54
STA 4628+81 TO STA 4656+98
STA 4656+58 TO STA 4664+66

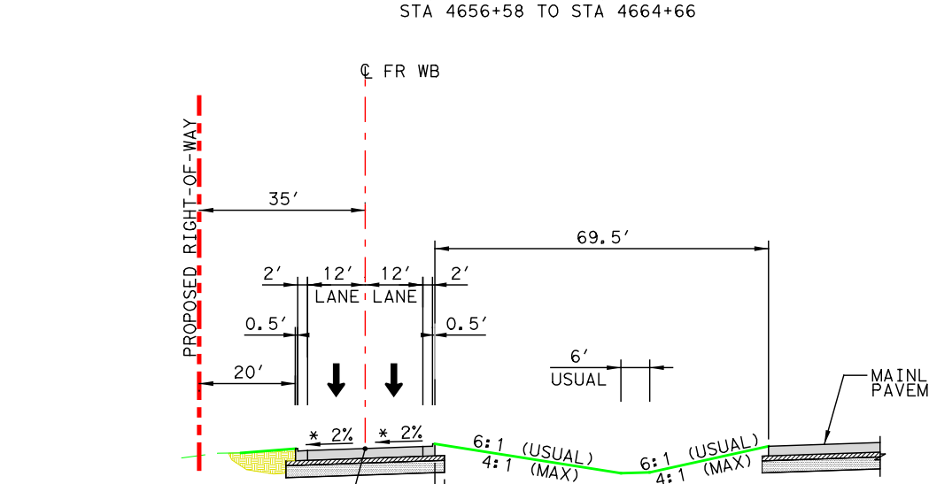

PROPOSED TYPICAL SECTION WESTBOUND FRONTAGE ROAD

STA 4396+65 TO STA 4415+62 STA 4601+00 TO STA 4613+73
STA 4429+28 TO STA 4429+35 STA 4617+71 TO STA 4619+38
STA 4451+17 TO STA 4452+24 STA 4623+54 TO STA 4628+81
STA 4459+00 TO STA 4473+07 STA 4664+66 TO STA 4694+43

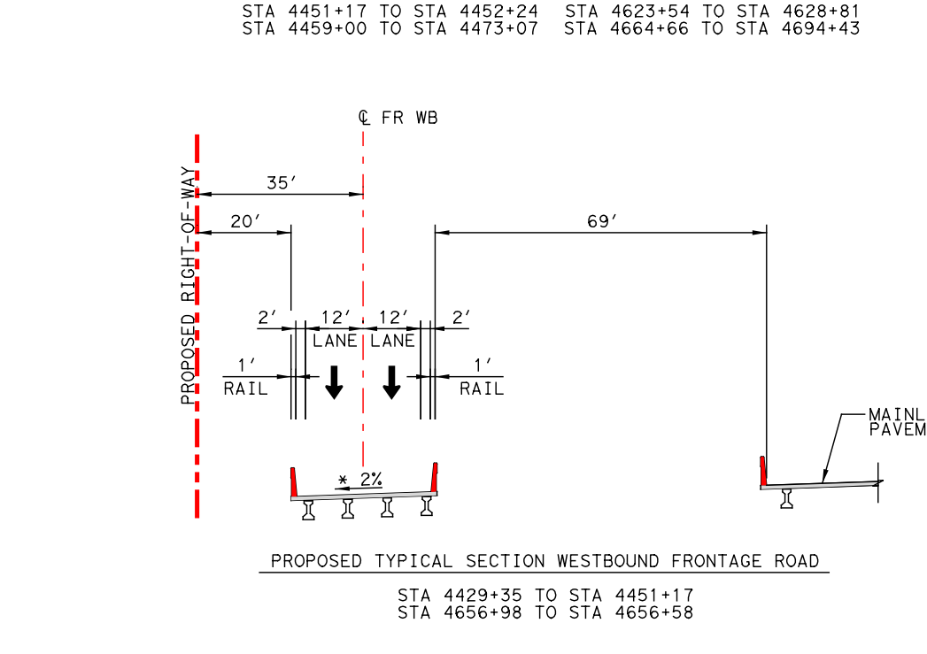

PROPOSED TYPICAL SECTION WESTBOUND FRONTAGE ROAD

STA 4429+35 TO STA 4451+17
STA 4656+98 TO STA 4656+58

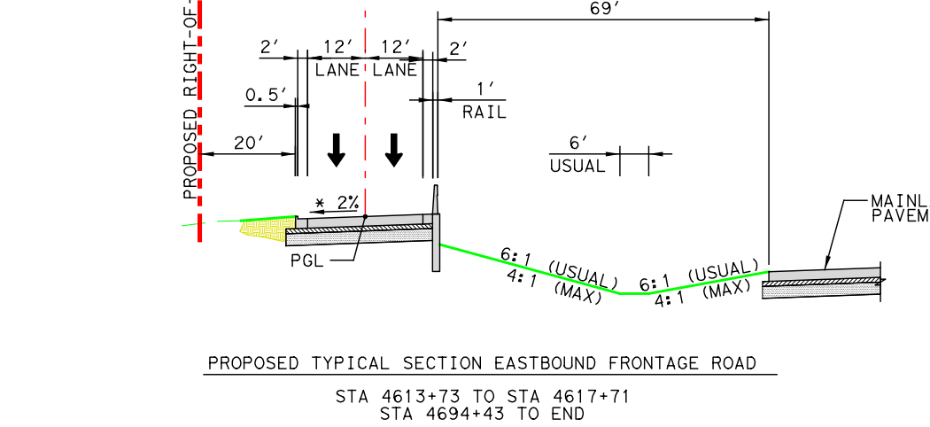

PROPOSED TYPICAL SECTION EASTBOUND FRONTAGE ROAD

STA 4613+73 TO STA 4617+71
STA 4694+43 TO END

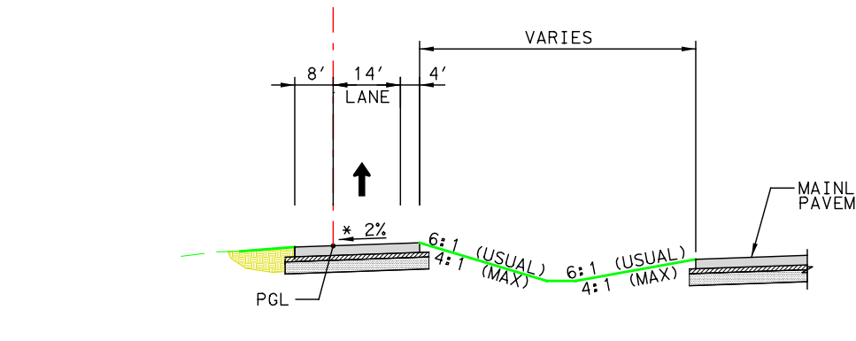
℄ RAMP
8'
14' LANE
4'
VARIES
MAINLANE PAVEMENT
PGL

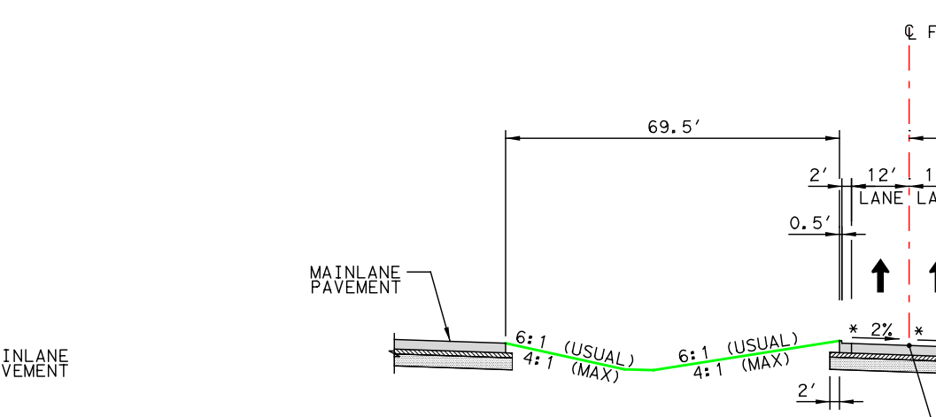

PROPOSED TYPICAL SECTION EASTBOUND FRONTAGE ROAD

STA 1392+78 TO STA 1394+50
STA 1419+94 TO STA 1433+79
STA 1451+37 TO STA 1453+36
STA 1474+90 TO STA 1476+45
STA 1667+16 TO STA 1667+58

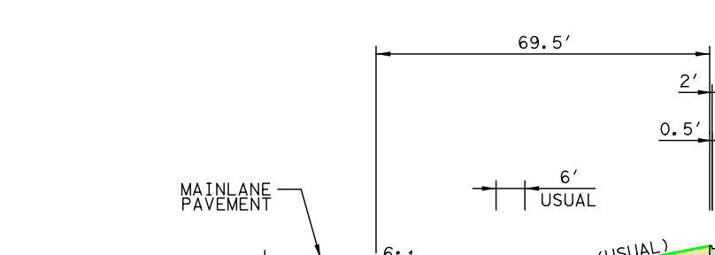

PROPOSED TYPICAL SECTION EASTBOUND FRONTAGE ROAD

STA 1391+89 TO STA 1392+78 STA 1453+36 TO STA 1474+90
STA 1394+50 TO STA 1397+22 STA 1601+00 TO STA 1660+62
STA 1401+50 TO STA 1419+94 STA 1667+58 TO END

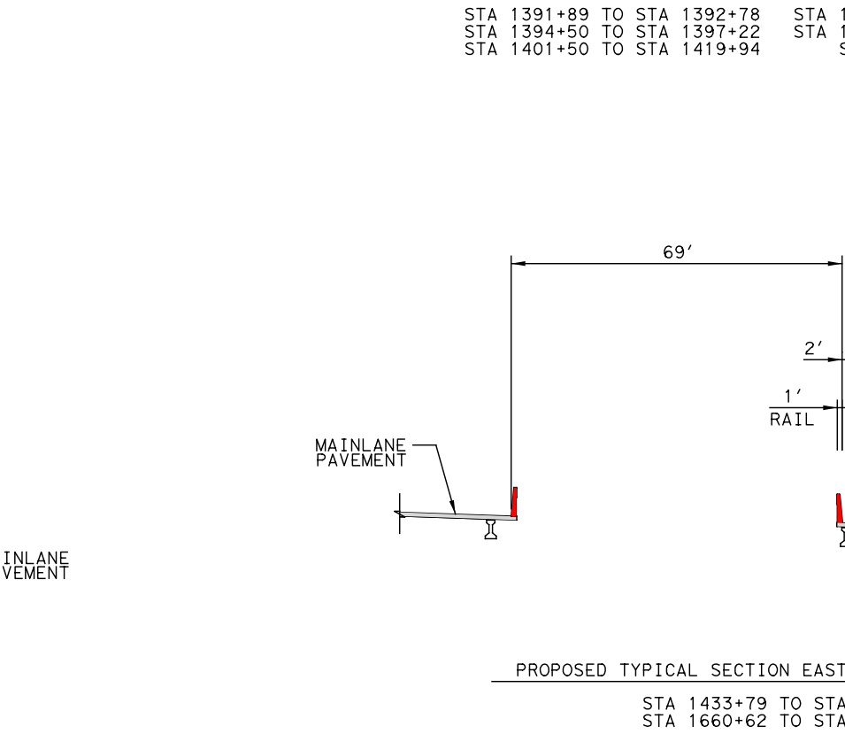

PROPOSED TYPICAL SECTION EASTBOUND FRONTAGE ROAD

STA 1433+79 TO STA 1451+37
STA 1660+62 TO STA 1667+16

JOHN P. WALDEN
JOHN P. WALDEN & WIFE JANE K. WALDEN
S F COLLIN COUNTY LLC
JOHN RATTAN TRUSTEE OF RATTAN FAMILY TRUST 2ND TRACT
JOHN RATTAN & ESTATE OF DOW & SUE RATTAN
JOHN HAMPTON RATTAN
FOSTER CROSSING/HWY 75 LP
COLLIN COUNTY
LES PENDENS NOTICE
GRAYSON-COLLIN ELECTRIC COOPERATIVE INC
QJR PARTNERSHIP, LTD.
MCKINNEY MUNICIPAL DISTRICT NO 1
MATCHLINE CL GP STA 5642+00
MATCHLINE STA 5695+00
CR 282
CR 286
CR 283
CR 277
HWY 75
END BRIDGE ℄ FR WB STA 4656+98.31
END BRIDGE ℄ FR EB STA 1660+62.07
END BRIDGE ℄ GP WB STA 3677+30.36
END BRIDGE ℄ GP EB STA 2679+01.86
℄ FR WB STA 4669+55.29 = ℄ RDGVW U STA 29+33.56
℄ GP WB STA 3670+76.15 = ℄ RDGVW U STA 30+51.56
℄ GP STA 5671+59.66 = ℄ RDGVW U STA 31+31.06
℄ GP EB STA 2672+44.17 = ℄ RDGVW U STA 32+22.56
℄ FR EB STA 1673+27.03 = ℄ RDGVW U STA 33+40.56
END BGE, INC PROJECT ℄ GP STA 5699+33.64 BEGIN HNTB PROJECT LIMITS
PERMANENT SLOPE EASEMENT
PROP ROW
EXIST ROW
RETAINING WALL WB-39
N 32° 36' 54.30" E
WATER
OH-ELEC

	CURVE NO.	DELTA	DEGREE	TANGENT	LENGTH	RADIUS	BACK BEARING	AHEAD BEARING	PI STATION	PC STATION	PT STATION	PI NORTHING	PI EASTING
CENTERLINE													
CL GP	CL GP 30	58° 05' 16.58" (RT)	1° 31' 40.39"	2082.42'	3801.85'	3750.00'	N 32° 36' 54.30" E	S 89° 17' 49.12" E	5698+16.53	5677+34.11	5715+35.96	7169010.65	2549045.97
MAINLANES													
CL GP EB	CL GP EB 30	58° 05' 16.58" (RT)	1° 33' 48.73"	2034.94'	3715.16'	3664.50'	N 32° 36' 54.30" E	S 89° 17' 49.12" E	2698+53.56	2678+18.62	2715+33.78	7168924.58	2549092.40
CL GP WB	CL GP WB 30	58° 05' 16.58" (RT)	1° 29' 37.78"	2129.90'	3888.53'	3835.50'	N 32° 36' 54.30" E	S 89° 17' 49.12" E	3697+79.50	3676+49.60	3715+38.13	7169096.73	2548999.55
FRONTAGE ROADS													
CL FR EB	CL FR EB 74	5°07'35.04" (LT)	3°49'10.99"	67.15'	134.21'	1500.00'	N 32°36'54.30" E	N 27°29'19.26" E	1666+82.95	1666+15.80	1667+50.01	7166072.27	2547421.55
	CL FR EB 75	5°07'35.04" (RT)	3°49'10.99"	67.15'	134.21'	1500.00'	N 27°29'19.26" E	N 32°36'54.30" E	1668+17.16	1667+50.01	1668+84.22	7166191.40	2547483.54
	CL FR EB 78	5°33'30.57" (RT)	3°49'10.99"	72.82'	145.52'	1500.00'	N 32°36'54.30" E	N 38°10'24.87" E	1678+76.18	1678+03.36	1679+48.88	7167083.50	2548054.39
	CL FR EB 79	3°53'50.17" (LT)	3°49'10.99"	51.03'	102.03'	1500.00'	N 38°10'24.87" E	N 34°16'34.70" E	1679+99.92	1679+48.88	1680+50.91	7167180.87	2548130.94
	CL FR EB 80	56°45'40.99" (RT)	1°37'53.14"	1897.40'	3479.24'	3512.00'	N 34°16'34.70" E	S 88°57'44.30" E	1699+48.32	1680+50.91	1715+30.16	7168790.92	2549228.27
CL FR WB	CL FR WB 73	5°07'35.04" (RT)	3°49'10.99"	67.15'	134.21'	1500.00'	N 32°36'54.30" E	N 37°44'29.34" E	4663+28.36	4662+61.21	4663+95.42	7166361.13	2547094.70
	CL FR WB 74	5°07'35.04" (LT)	3°49'10.99"	67.15'	134.21'	1500.00'	N 37°44'29.34" E	N 32°36'54.30" E	4664+62.57	4663+95.42	4665+29.63	7166467.33	2547176.91
	CL FR WB 77	2°41'25.43" (LT)	3°49'10.99"	35.22'	70.43'	1500.00'	N 32°36'54.30" E	N 29°55'28.87" E	4676+31.00	4675+95.78	4676+66.21	7167451.59	2547806.74
	CL FR WB 78	7°30'11.77" (RT)	3°49'10.99"	98.36'	196.44'	1500.00'	N 29°55'28.87" E	N 37°25'40.64" E	4677+64.57	4676+66.21	4678+62.65	7167567.36	2547873.37
	CL FR WB 79	53°16'30.24" (RT)	1°26'41.48"	1989.02'	3687.22'	3965.50'	N 37°25'40.64" E	S 89°17'49.12" E	4698+51.67	4678+62.65	4715+49.87	7169224.99	2549142.01

	CURVE NO.	DELTA	DEGREE	TANGENT	LENGTH	RADIUS	BACK BEARING	AHEAD BEARING	PI STATION	PC STATION	PT STATION	PI NORTHING	PI EASTING
RAMPS													
7WBENT	7WBENT 1	4°44'19.67" (LT)	0°59'16.29"	239.99'	479.70'	5800.00'	S 89°21'53.01" E	N 85°53'47.32" E	2+39.99 R1	0+00.00 R1	4+79.70 R1	7163088.06	2543264.29
	7WBENT 2	1°50'30.04" (RT)	0°59'16.29"	93.22'	186.43'	5800.00'	N 85°53'47.32" E	N 87°44'17.36" E	6+22.87 R1	5+29.65 R1	7+16.08 R1	7163115.48	2543646.47
	7WBENT 3	4°07'36.09" (LT)	2°10'32.35"	94.88'	189.68'	2633.50'	N 87°44'17.36" E	N 83°36'41.27" E	8+10.96 R1	7+16.08 R1	9+05.76 R1	7163122.90	2543834.43
	7WBENT 4	20°06'48.45" (LT)	3°22'13.22"	301.49'	596.78'	1700.00'	N 83°36'41.27" E	N 63°29'52.82" E	12+07.25 R1	9+05.76 R1	15+02.54 R1	7163167.01	2544228.34
	7WBENT 5	3°29'12.15" (RT)	3°22'13.22"	51.74'	103.45'	1700.00'	N 63°29'52.82" E	N 66°59'04.97" E	16+14.72 R1	15+62.98 R1	16+66.43 R1	7163351.60	2544598.54
7WBEXT	7WBEXT 1	4°00'00.00" (RT)	0°43'40.90"	274.83'	549.43'	7870.00'	N 32°36'54.30" E	N 36°36'54.30" E	2+74.83 R1	0+00.00 R1	5+49.43 R1	7164791.53	2546090.32
	7WBEXT 2	4°00'00.00" (LT)	0°43'40.90"	274.83'	549.43'	7870.00'	N 36°36'54.30" E	N 32°36'54.30" E	16+22.15 R1	13+47.32 R1	18+96.75 R1	7165873.15	2546894.04

CHAIN NAME	CURVE NAME	BEGIN CROSS SLOPE	BEGIN TRANSITION	BEGIN FULL SUPER	SUPER RATE	END FULL SUPER	END TRANSITION	END CROSS SLOPE
CL GP EB	CL GP EB 30	2.00%	2676+40	2678+50	4.74%	2714+65	2716+75	2.00%
CL GP WB	CL GP WB 30	-2.00%	3673+10	3677+05	4.56%	3714+10	3718+05	-2.00%

GPWB

MATCHLINE CL GP STA 5642+00
MATCHLINE CL GP STA 5695+00
VPI STA = 3641+90.00 EL = 589.00 ex = 0.53' K = 186 L = 280.22
VPI STA = 3660+71.26 EL = 598.41 ex = 1.41' K = 181 L = 452.50
VPI STA = 3668+90.78 EL = 622.99 ex = -6.25' K = 247 L = 1,111.50
CL GP WB STA 3670+75.15 CLRDGVW_U STA 30+51.56
VPI STA = 3680+67.79 EL = 605.34 ex = 6.84' K = 181 L = 995.50
VPI STA = 3694+30.00 EL = 659.83 ex = -2.31' K = 247 L = 676.00
VPI STA = 24+55.24 EL = 597.28 ex = -0.66' K = 84 L = 210.00
VPI STA = 27+73.05 EL = 590.92 ex = 0.75' K = 96 L = 240.00
VPI STA = 36+19.55 EL = 595.15 ex = 1.92' K = 126 L = 440.00
19.15' MIN CLEAR
PROP PROFILE
EXIST GROUND
PROFILE BY OTHERS
℄ RDGVW
3645+00
3650+00
3655+00
3660+00
3665+00
3670+00
3675+00
3680+00
3685+00
3690+00
3695+00
3700+00
3705+00
20+00
25+00
30+00
35+00
40+00

GPEB

MATCHLINE CL GP STA 5642+00
MATCHLINE CL GP STA 5695+00
VPI STA = 2662+42.50 EL = 599.21 ex = 1.41' K = 181 L = 452.50
VPI STA = 2670+65.88 EL = 623.91 ex = -6.25' K = 247 L = 1,111.50
℄ CL GP EB STA 2672+44.17 ℄ CLRDGVW_U STA 32+22.56
VPI STA = 2682+57.31 EL = 606.04 ex = 6.84' K = 181 L = 995.50
VPI STA = 2696+38.00 EL = 661.27 ex = -2.20' K = 248 L = 660.00
19.15' MIN CLEAR
PROP PROFILE
EXIST GROUND
PROFILE BY OTHERS
2645+00
2650+00
2655+00
2660+00
2665+00
2670+00
2675+00
2680+00
2685+00
2690+00
2695+00
2700+00
2705+00

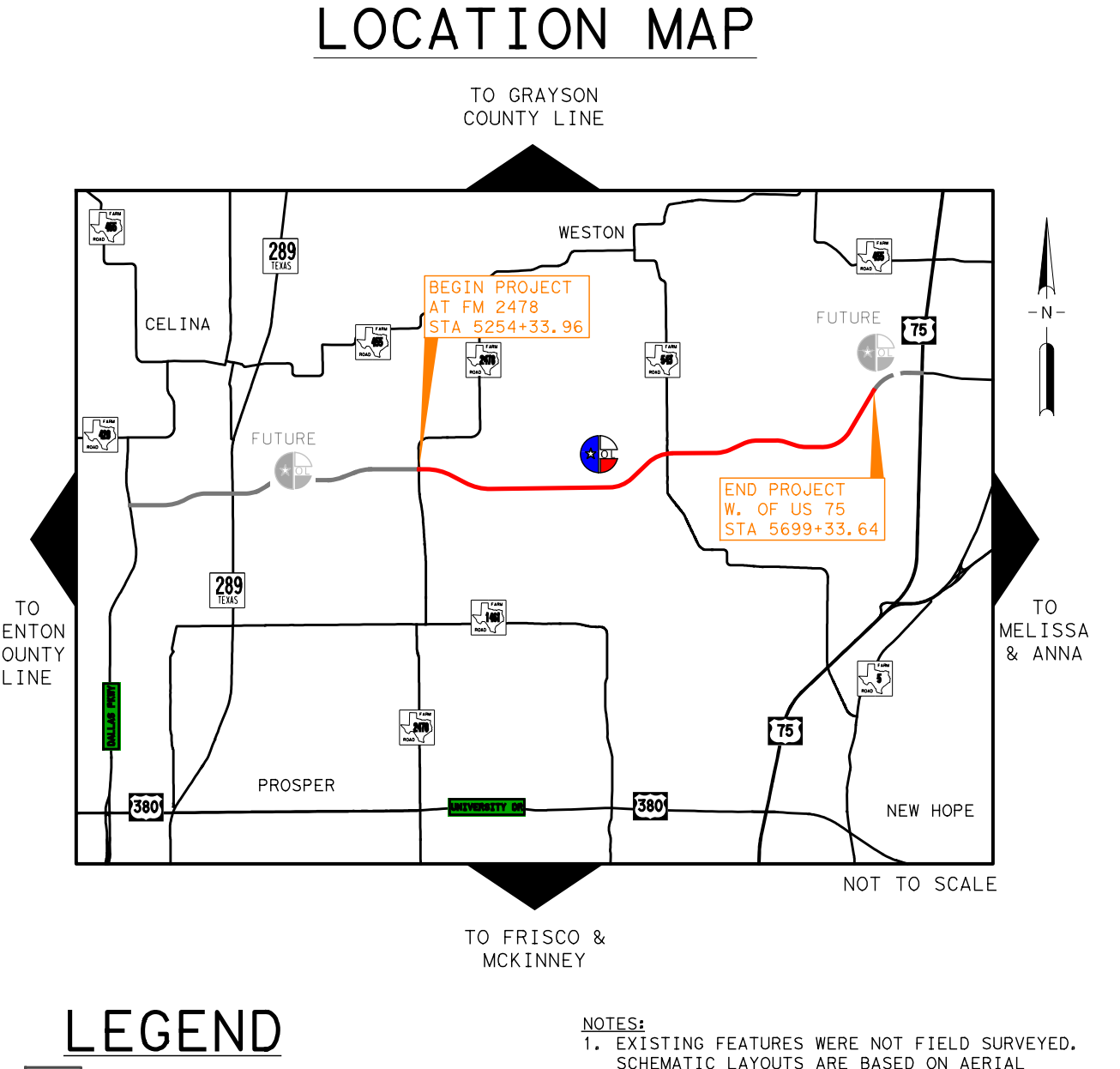COLLIN COUNTY TOLL ROAD AUTHORITY
COLLIN COUNTY OUTER LOOP
PHASE III: FUTURE EAST BOUND FRONTAGE ROAD
FM 2478 TO WEST OF US 75
ROADWAY FUNCTIONAL CLASSIFICATION: URBAN FREEWAY
ROADWAY CONSTRUCTION TYPE: NEW FACILITY
DESIGN SPEED (MAINLANES): 70 MPH
DESIGN SPEED (OUTER LOOP EBFR): 45 MPH
DESIGN SPEED (RAMPS): 50 MPH
DESIGN SPEED (CR 52,51,53,1117): 40 MPH
NET LENGTH OF PROJECT: 7.97 MILES
SCHEMATIC SCALE: HORIZ: 1"=100' VERT: 1"=20'
AERIAL PHOTO DATE: 2015
LOCATION MAP
DESIGN SCHEMATIC COLLIN COUNTY OUTER LOOP
COUNTY: COLLIN DATE: JULY 2019
ROLL 5 OF 8
LEGEND
NOTES
EXISTING UTILITY LEGEND
SCHEMATIC PREPARED BY: BGE, INC. REGISTRATION NUMBER F-1046
MICHAEL H. GARRISON 79285
STONEY D. SKIDMORE 106316
7/10/2019
BGE, Inc. 2595 Dallas Parkway, Suite 101, Frisco, TX 75034 Tel: 972-464-4800 • www.bgeinc.com TBPE Registration No. F-1046